Acme Sanitary Ware Co. Ltd.
1/F, Acme Building, 22-28 Nanking Street, Kowloon, Hong Kong
Tel: 2388 7171 Fax: 2710 8012
Email: acme@acmesanitary.com.hk
Website: www.acmesanitary.com.hk
Since 1949

iDECOR
Confidence Come From the Outstanding Quaitly

PROJECT		REF		REV	ITEM CODE	
LOCATION		DATE			PAGE	

SANITARY WARE SPECIFICATION SHEET

Item Descriptions	Idecor (PRC) 304 Stainless steel single bowl insert sink with waste fittings and overflow hole
Dimensions	L468 x W408 x H180 mm (Overall) L416 x W356 x H180 mm (Bowl)
Model	E1504
Material	Stainless Steel 304
Manufacturer	Idecor (PRC)
Source	Acme Sanitary Ware Co. Ltd Mr. Eric Wong/ Mr. Don Yuen
Contact Tel/Fax E-mail Website	(852) 2388-7171 / (852) 2710-8012 acme@acmesanitary.com.hk www.acmesanitary.com.hk

Illustration/ Drawing

Product Detail :

"Flat rim sinks"

- Model : E1504
- Size (mm) : 468 mm x 408 mm x 180 mm
- Size (inch) : 18" x 16" x 7"
- CUT-OUT (mm) : 434 mm x 374 mm
- 304 Stainless Steel Single Bowl

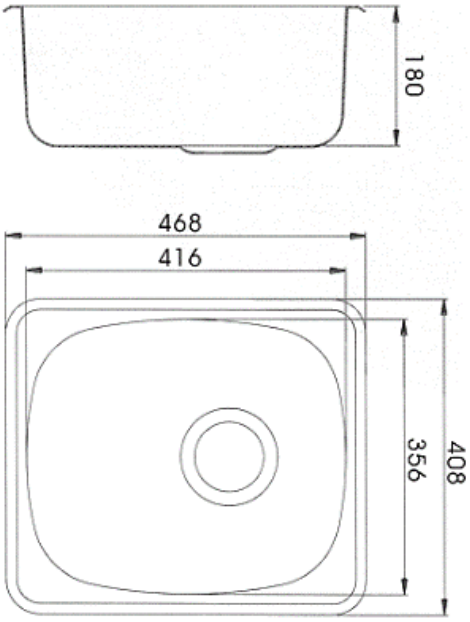

Note:

** All information of the above is for reference only. No prior notice is made if any changes.*